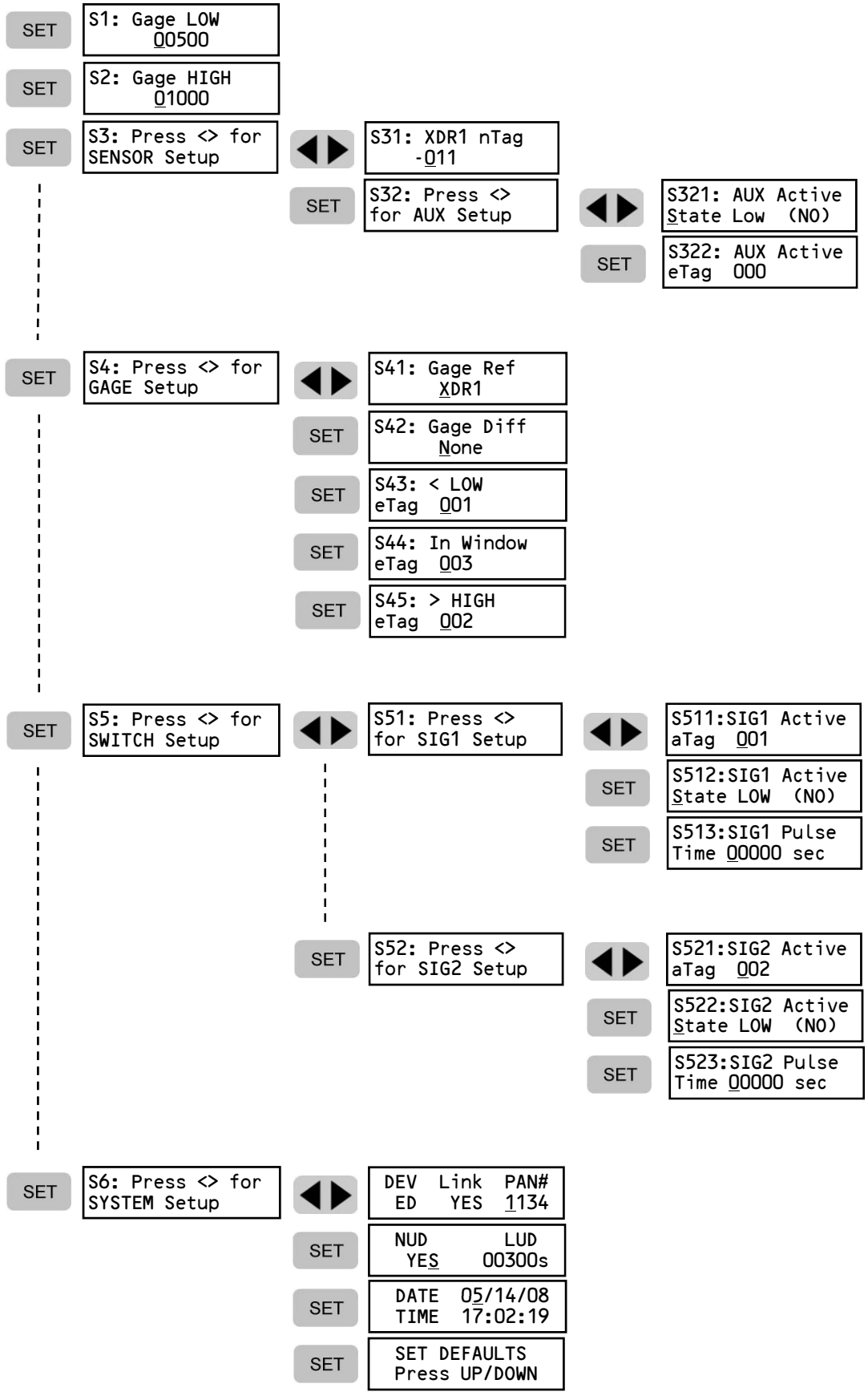
SET
S1: Gage LOW
00500
SET
S2: Gage HIGH
01000
SET
S3: Press <> for
SENSOR Setup
S31: XDR1 nTag
-011
SET
S32: Press <>
for AUX Setup
S321: AUX Active
State Low (NO)
SET
S322: AUX Active
eTag 000
SET
S4: Press <> for
GAGE Setup
S41: Gage Ref
XDR1
SET
S42: Gage Diff
None
SET
S43: < LOW
eTag 001
SET
S44: In Window
eTag 003
SET
S45: > HIGH
eTag 002
SET
S5: Press <> for
SWITCH Setup
S51: Press <>
for SIG1 Setup
S511:SIG1 Active
aTag 001
SET
S512:SIG1 Active
State LOW (NO)
SET
S513:SIG1 Pulse
Time 00000 sec
SET
S52: Press <>
for SIG2 Setup
S521:SIG2 Active
aTag 002
SET
S522:SIG2 Active
State LOW (NO)
SET
S523:SIG2 Pulse
Time 00000 sec
SET
S6: Press <> for
SYSTEM Setup
DEV Link PAN#
ED YES 1134
SET
NUD LUD
YES 00300s
SET
DATE 05/14/08
TIME 17:02:19
SET
SET DEFAULTS
Press UP/DOWN

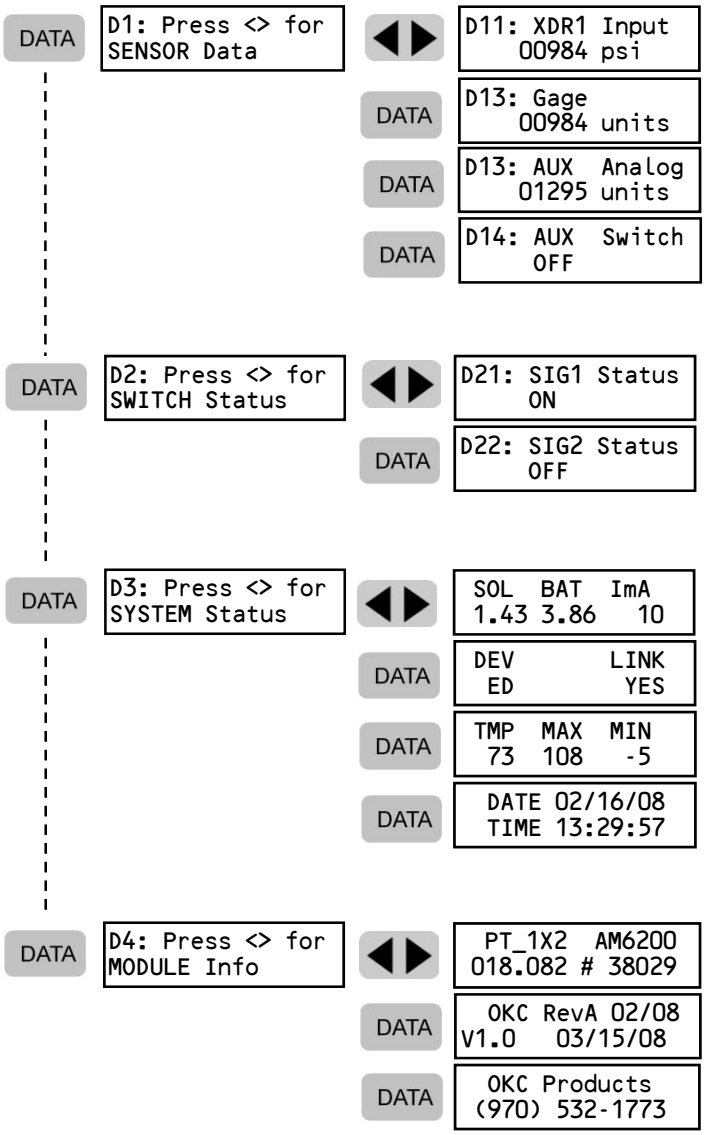
DATA
D1: Press <> for SENSOR Data
D11: XDR1 Input 00984 psi
DATA
D13: Gage 00984 units
DATA
D13: AUX Analog 01295 units
DATA
D14: AUX Switch OFF
DATA
D2: Press <> for SWITCH Status
D21: SIG1 Status ON
DATA
D22: SIG2 Status OFF
DATA
D3: Press <> for SYSTEM Status
SOL BAT ImA 1.43 3.86 10
DATA
DEV LINK ED YES
DATA
TMP MAX MIN 73 108 -5
DATA
DATE 02/16/08 TIME 13:29:57
DATA
D4: Press <> for MODULE Info
PT_1X2 AM6200 018.082 # 38029
DATA
OKC RevA 02/08 V1.0 03/15/08
DATA
OKC Products (970) 532-1773