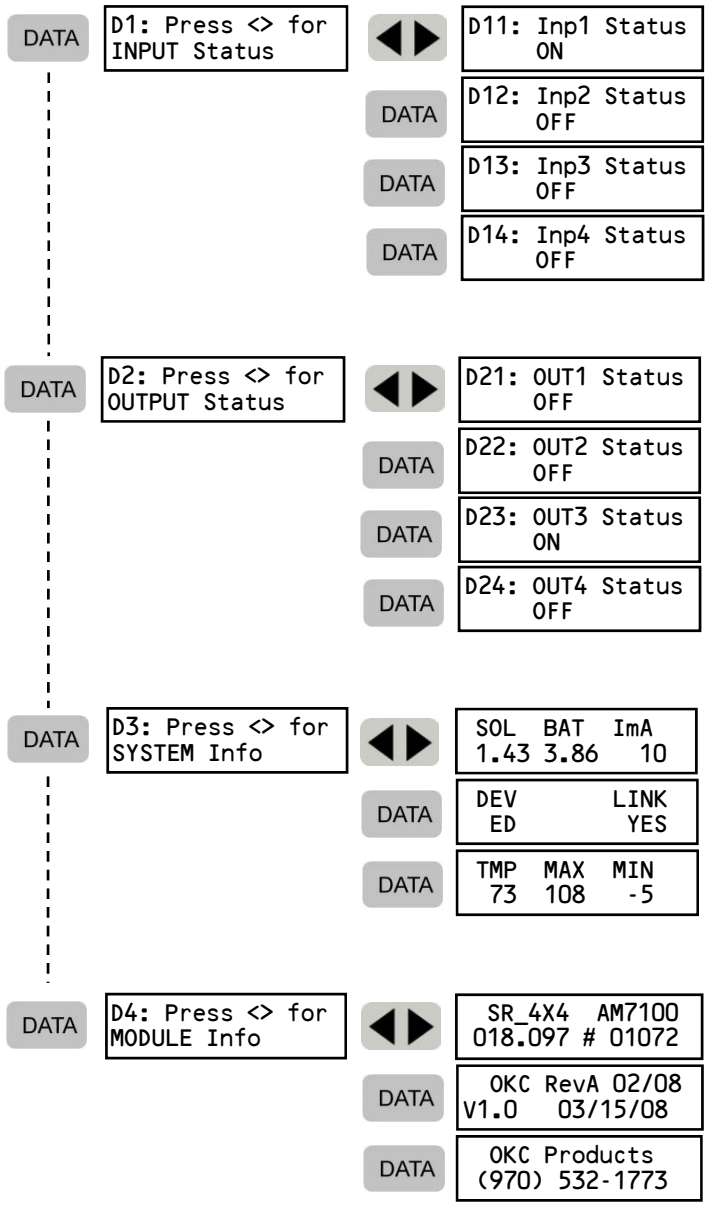
DATA
D1: Press <> for INPUT Status
D11: Inp1 Status ON
DATA
D12: Inp2 Status OFF
DATA
D13: Inp3 Status OFF
DATA
D14: Inp4 Status OFF
DATA
D2: Press <> for OUTPUT Status
D21: OUT1 Status OFF
DATA
D22: OUT2 Status OFF
DATA
D23: OUT3 Status ON
DATA
D24: OUT4 Status OFF
DATA
D3: Press <> for SYSTEM Info
SOL BAT ImA
1.43 3.86 10
DATA
DEV LINK
ED YES
DATA
TMP MAX MIN
73 108 -5
DATA
D4: Press <> for MODULE Info
SR_4X4 AM7100
018.097 # 01072
DATA
OKC RevA 02/08
V1.0 03/15/08
DATA
OKC Products
(970) 532-1773

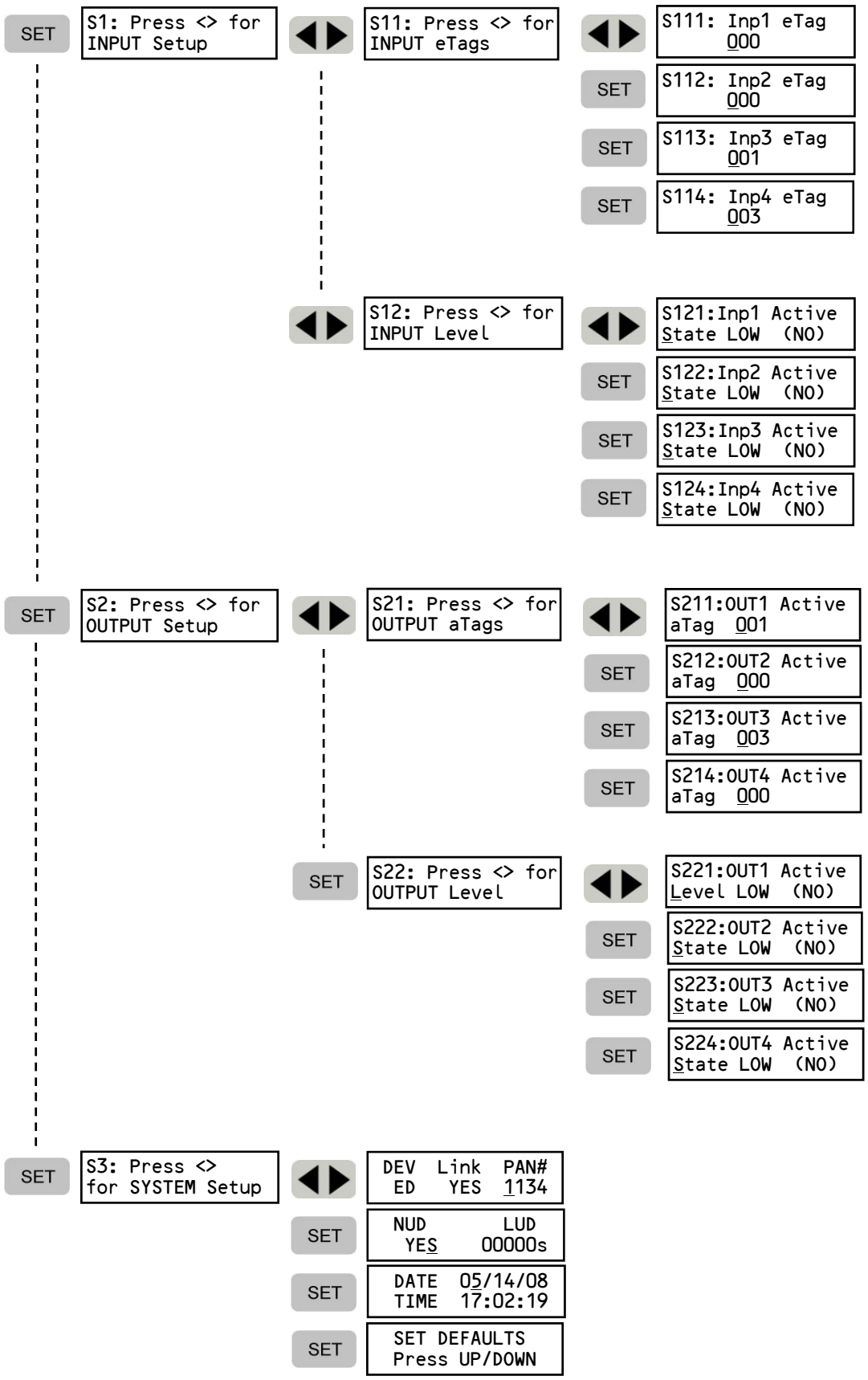
SET
S1: Press <> for INPUT Setup
S11: Press <> for INPUT eTags
S111: Inp1 eTag 000
SET
S112: Inp2 eTag 000
SET
S113: Inp3 eTag 001
SET
S114: Inp4 eTag 003
S12: Press <> for INPUT Level
S121:Inp1 Active State LOW (NO)
SET
S122:Inp2 Active State LOW (NO)
SET
S123:Inp3 Active State LOW (NO)
SET
S124:Inp4 Active State LOW (NO)
SET
S2: Press <> for OUTPUT Setup
S21: Press <> for OUTPUT aTags
S211:OUT1 Active aTag 001
SET
S212:OUT2 Active aTag 000
SET
S213:OUT3 Active aTag 003
SET
S214:OUT4 Active aTag 000
SET
S22: Press <> for OUTPUT Level
S221:OUT1 Active Level LOW (NO)
SET
S222:OUT2 Active State LOW (NO)
SET
S223:OUT3 Active State LOW (NO)
SET
S224:OUT4 Active State LOW (NO)
SET
S3: Press <> for SYSTEM Setup
DEV Link PAN#
ED YES 1134
SET
NUD LUD
YES 00000s
SET
DATE 05/14/08
TIME 17:02:19
SET
SET DEFAULTS
Press UP/DOWN